Features	1、Basic universal 2、Short circuit, overload protection, etc 3、LED power indicator 4、100% full load burn-in test

Overview

- Single unit output：15W
- Input voltage：AC88-264V
- Size：79×51×28mm

General Specification

Specofication	Model			
	BNES-15-5	BNES-15-12	BNES-15-24	BNES-15-48
DC output	5V 3A	12V 1.3A	24V 0.7A	48V 0.35A
Wave and noise	80mVp-p	120mVp-p	120mVp-p	120mVp-p
Inlet stability	±0.5%	±0.5%	±0.5%	±0.5%
Load stability	±0.5%	±0.5%	±0.5%	±0.5%
Efficiency	79%	81%	85%	82%
Adjustable range for DC voltage	±10%	±10%	±10%	±10%
AC input voltage range	88-264VAC 47--63HZ 255-370VAC			
AC inrush current	Cold-start current 45A/230V			
OverLoad protection	110%--150% hiccup mode,auto-recovery			
Over-voltage protection	115%--135% rated output voltage,hiccup mode,auto-recovery			
Setup,rise,hold up time	1000ms 30ms 100ms/230VAC ;1000ms 30ms 20ms/115VAC			
Withstand voltage	I/P-O/P：1.5KvAC I/P-FG：1.5Kv O/P-FG：0.5Kv 1minute			
Isolation resistance	I/P-O/P I/P-FG O/P-FG:500VDC/100MΩ			
Working temperature	--10℃----+50℃			

Safety standards	Design refer to GB4943，UL60950，EN60950
EMC standards	Design refer to GB9254，EN55022 ClassB
Weight	0.2kg

Overall Dimenseion(mm)

TOP

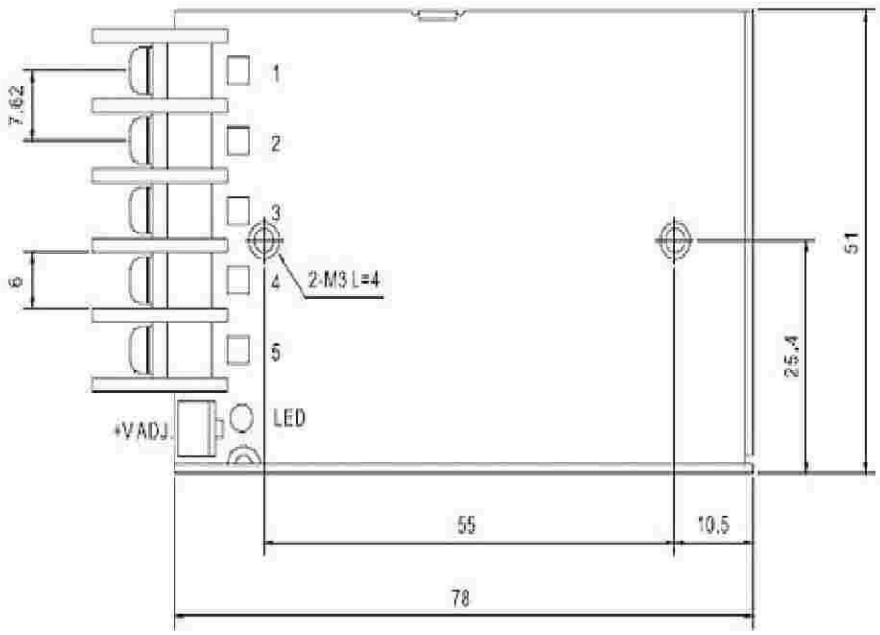

端子台脚位定义

引脚编号	引脚功能	引脚编号	引脚功能
1	AC/L	4	DC OUTPUT -V
2	AC/N	5	DC OUTPUT +V
3	FG ⏚		

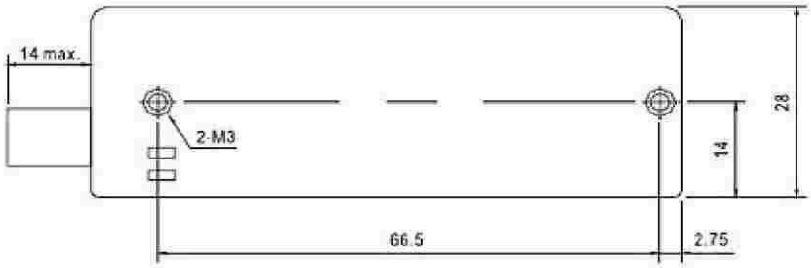

Overview

- Single unit output：25W
- Input voltage：AC88-264V
- Size：99×82×35mm

General Specification

Specofication	Model			
	BNES-25-5	BNES-25-12	BNES-25-24	BNES-25-48
DC output	5V 5A	12V 2.1A	24V 1.1A	48V 0.57A
Wave and noise	80mVp-p	120mVp-p	120mVp-p	120mVp-p
Inlet stability	±0.5%	±0.5%	±0.5%	±0.5%
Load stability	±0.5%	±0.5%	±0.5%	±0.5%
Efficiency	80%	83%	86%	86%
Adjustable range for DC voltage	±10%	±10%	±10%	±10%
AC input voltage range	88-264VAC 47--63HZ 255-370VAC			
AC inrush current	Cold-start current 45A/230V			
OverLoad protection	110%--150% hiccup mode,auto-recovery			
Over-voltage protection	115%--135% rated output voltage,hiccup mode,auto-recovery			
Setup,rise,hold up time	500ms 30ms 50ms/230VAC ; 1200ms 30ms 10ms/115VAC			
Withstand voltage	I/P-O/P：1.5KvAC I/P-FG：1.5Kv O/P-FG：0.5Kv 1minute			
Isolation resistance	I/P-O/P I/P-FG O/P-FG:500VDC/100MΩ			
Working temperature	~-10℃---+50℃			

Safety standards	Design refer to GB4943，UL60950，EN60950
EMC standards	Design refer to GB9254，EN55022 Class B
Weight	0.31kg

Overall Dimenseion(mm)

TOP

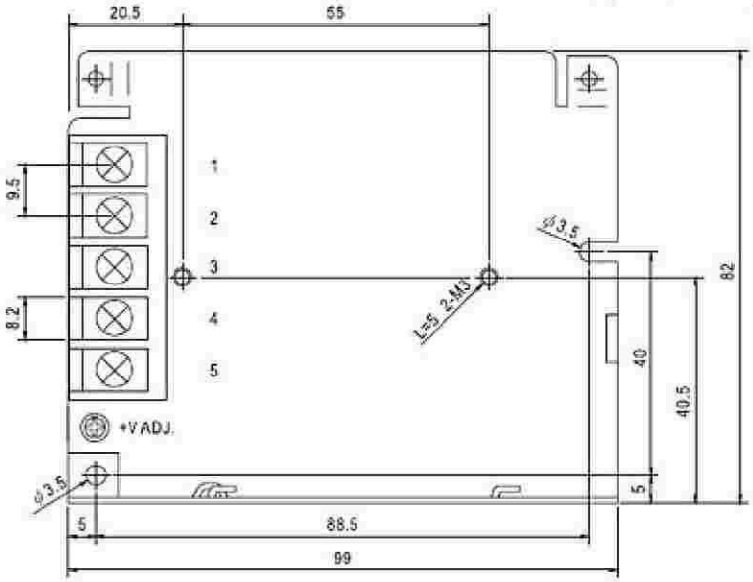

端子台脚位定义

引脚编号	引脚功能	引脚编号	引脚功能
1	AC/L	4	DC OUTPUT -V
2	AC/N	5	DC OUTPUT +V
3	FG ⏚		

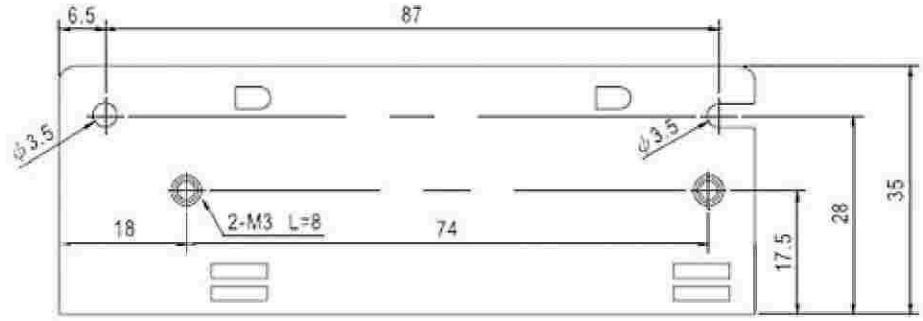

Overview

- Single unit output： 35W
- Input voltage：AC88-264V
- Size：99×97×36mm

General Specification

Specofication	Model			
	BNES-35-5	BNES-35-12	BNES-35-24	BNES-35-48
DC output	5V 7A	12V 3A	24V 1.5A	48V 0.8A
Wave and noise	80mVp-p	120mVp-p	120mVp-p	120mVp-p
Inlet stability	±0.5%	±0.5%	±0.5%	±0.5%
Load stability	±0.5%	±0.5%	±0.5%	±0.5%
Efficiency	77%	81%	84%	84%
Adjustable range for DC voltage	±10%	±10%	±10%	±10%
AC input voltage range	88-264VAC 47--63HZ 255-370VAC			
AC inrush current	Cold-start current 40A/230V			
OverLoad protection	110%--150% hiccup mode,auto-recovery			
Over-voltage protection	115%--135% rated output voltage,hiccup mode,auto-recovery			
Setup,rise,hold up time	500ms 30ms 50ms/230VAC 1200ms 30ms 10ms/115VAC			
Withstand voltage	I/P-O/P：1.5KvAC I/P-FG：1.5Kv O/P-FG：0.5Kv 1minute			
Isolation resistance	I/P-O/P I/P-FG O/P-FG:500VDC/100MΩ			
Working temperature	~-10℃----+50℃			

Safety standards	Design refer to GB4943，UL60950，EN60950
EMC standards	Design refer to GB9254，EN55022 Class B
Weight	0.45kg

Overall Dimenseion(mm)

TOP

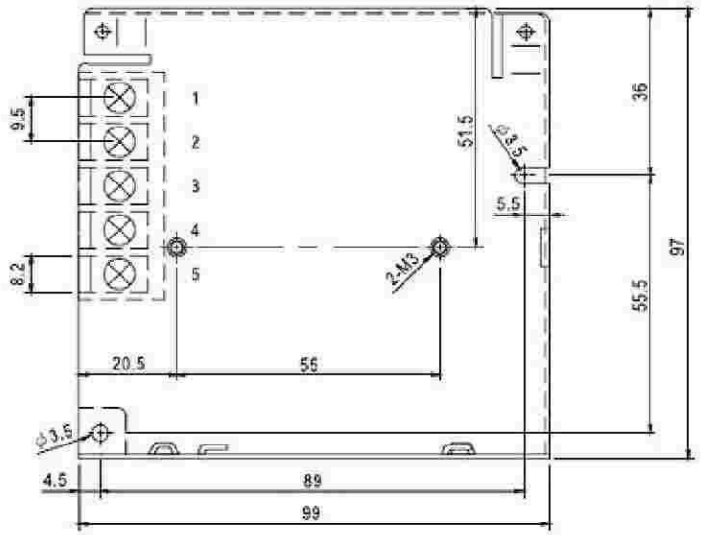

端子台脚位定义

引脚编号	引脚功能	引脚编号	引脚功能
1	AC/L	4	DC OUTPUT -V
2	AC/N	5	DC OUTPUT +V
3	FG ⏚		

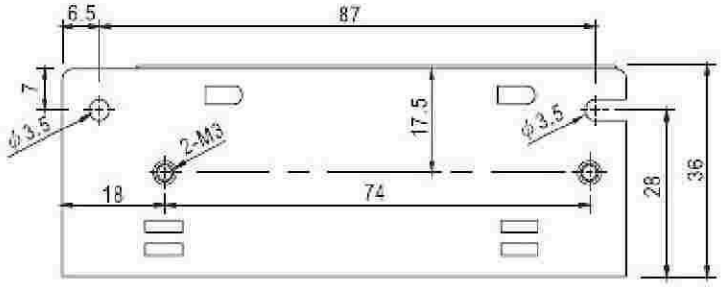

Overview

- Single unit output：50W
- Input voltage：AC88-264V
- Size：129×98×38mm

General Specification

Specofication	Model			
	BNES-50-5	BNES-50-12	BNES-50-24	BNES-50-48
DC output	5V 10A	12V 4.2A	24V 2.2A	48V 1.1A
Wave and noise	80mVp-p	120mVp-p	120mVp-p	120mVp-p
Inlet stability	±0.5%	±0.5%	±0.5%	±0.5%
Load stability	±0.5%	±0.5%	±0.5%	±0.5%
Efficiency	78%	81%	84%	86%
Adjustable range for DC voltage	±10%	±10%	±10%	±10%
AC input voltage range	88-264VAC 47--63HZ 255-370VAC			
AC inrush current	Cold-start current 45A/230V			
OverLoad protection	110%--150% hiccup mode,auto-recovery			
Over-voltage protection	115%--135% rated output voltage,hiccup mode,auto-recovery			
Setup,rise,hold up time	500ms 30ms 50ms/230VAC 1200ms 30ms 10ms/115VAC			
Withstand voltage	I/P-O/P：1.5KvAC I/P-FG：1.5Kv O/P-FG：0.5Kv 1minute			
Isolation resistance	I/P-O/P I/P-FG O/P-FG:500VDC/100MΩ			
Working temperature	-10℃----+50℃			

Safety standards	Design refer to GB4943，UL60950，EN60950
EMC standards	Design refer to GB9254，EN55022 Class B
Weight	0.48kg

Overall Dimenseion(mm)

TOP

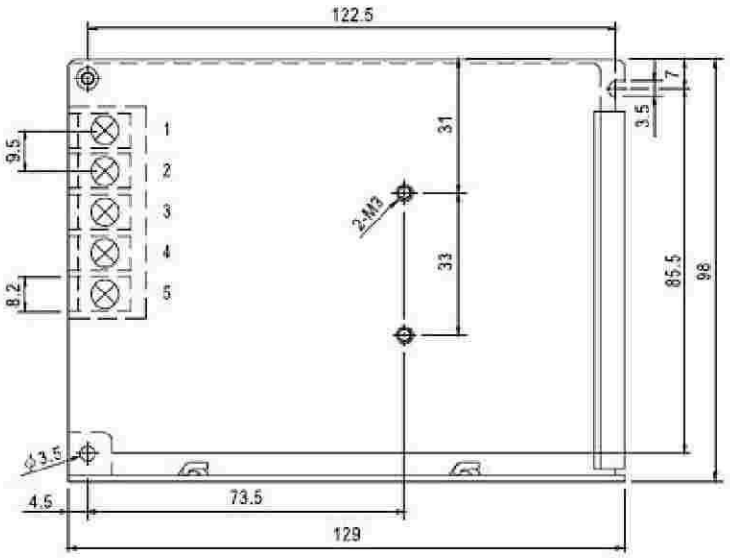

端子台脚位定义

引脚编号	引脚功能	引脚编号	引脚功能
1	AC/L	4	DC OUTPUT -V
2	AC/N	5	DC OUTPUT +V
3	FG ⏚		

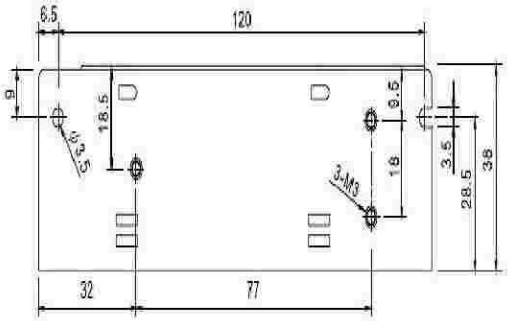

Overview

- Single unit output：75W
- Input voltage ：AC88-264V
- Size：159×97×38mm

General Specification

Specofication	Model			
	BNES-75-5	BNES-75-12	BNES-75-24	BNES-75-48
DC output	5V 12A	12V 6A	24V 3.2A	48V 1.6A
Wave and noise	80mVp-p	120mVp-p	120mVp-p	120mVp-p
Inlet stability	±0.5%	±0.5%	±0.5%	±0.5%
Load stability	±0.5%	±0.5%	±0.5%	±0.5%
Efficiency	76%	81%	85%	86%
Adjustable range for DC voltage	±10%	±10%	±10%	±10%
AC input voltage range	88-264VAC 47--63HZ 255-370VA			
AC inrush current	Cold-start current 40A/230V			
OverLoad protection	110%--150% hiccup mode,auto-recovery			
Over-voltage protection	115%--135% rated output voltage,hiccup mode,auto-recovery			
Setup,rise,hold up time	500ms 20ms 100ms/230VAC; 1200ms 30ms 18ms/115VAC			
Withstand voltage	I/P-O/P：1.5KvAC I/P-FG：1.5Kv O/P-FG：0.5Kv 1minute			
Isolation resistance	I/P-O/P I/P-FG O/P-FG:500VDC/100MΩ			
Working temperature	--10℃----+50℃			

Safety standards	Design refer to GB4943，UL60950，EN60950
EMC standards	Design refer to GB9254，EN55022 Class B
Weight	0.65kg

Overall Dimenseion(mm)

TOP

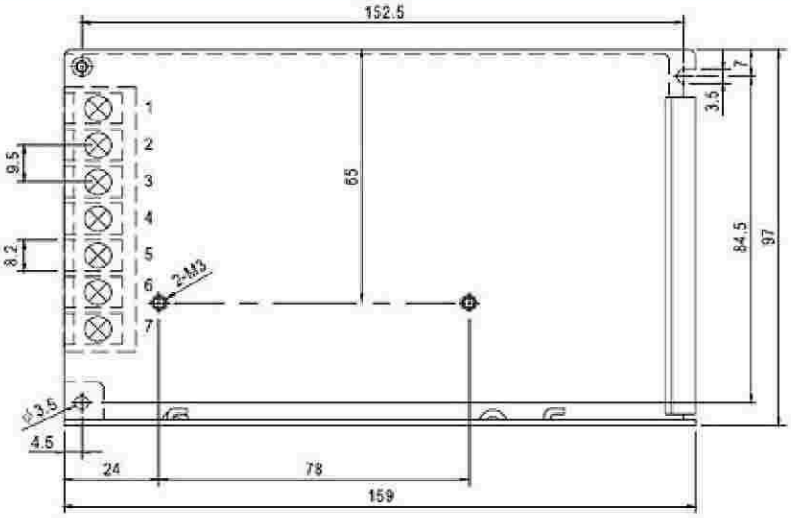

端子台脚位定义

引脚编号	引脚功能	引脚编号	引脚功能
1	AC/L	4,5	DC OUTPUT -V
2	AC/N	6,7	DC OUTPUT +V
3	FG ⏚		

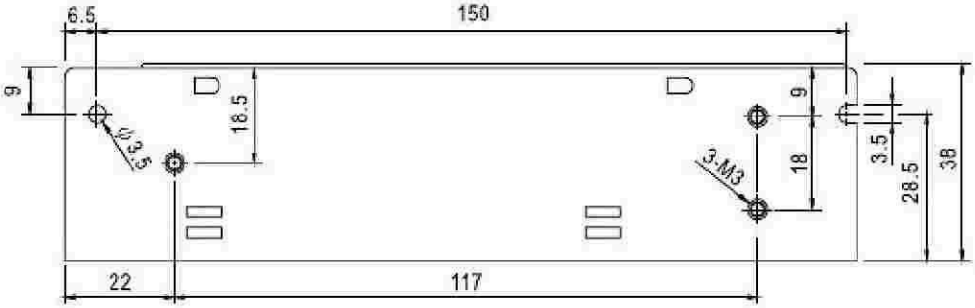

Overview

- Single unit output：powers 10W
- Input voltage : AC100-240V
- Size：159×97×38mm

General Specification

Specofication	Model			
	BNES-100-5	BNES-100-12	BNES-100-24	BNES-100-48
DC output	5V 16A	12V 8.5A	24V 4.5A	48V 2.3A
Wave and noise	80mVp-p	120mVp-p	120mVp-p	120mVp-p
Inlet stability	±0.5%	±0.5%	±0.5%	±0.5%
Load stability	±0.5%	±0.5%	±0.5%	±0.5%
Efficiency	77%	81%	84%	84%
Adjustable range for DC voltage	±10%	±10%	±10%	±10%
AC input voltage range	88-264VAC 47--63HZ 255-370VAC			
AC inrush current	Cold-start current 45A/230V			
OverLoad protection	110%--150% hiccup mode,auto-recovery			
Over-voltage protection	115%--135% rated output voltage,hiccup mode,auto-recovery			
Setup,rise,hold up time	500ms 20ms 30ms/230VAC; 500ms 20ms 25ms/115VA			
Withstand voltage	I/P-O/P：1.5KvAC I/P-FG：1.5Kv O/P-FG：0.5Kv 1minute			
Isolation resistance	I/P-O/P I/P-FG O/P-FG:500VDC/100MΩ			
Working temperature	~-10℃----+50℃			

Safety standards	Design refer to GB4943，UL60950，EN60950
EMC standards	Design refer to GB9254，EN55022 Class B
Weight	0.65kg

Overall Dimenseion(mm)

TOP

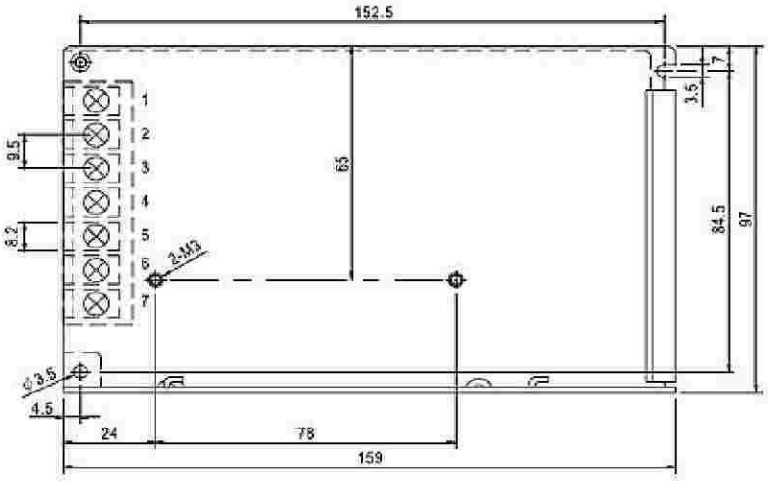

端子台脚位定义

引脚编号	引脚功能	引脚编号	引脚功能
1	AC/L	4,5	DC OUTPUT -V
2	AC/N	6,7	DC OUTPUT +V
3	FG ⏚		

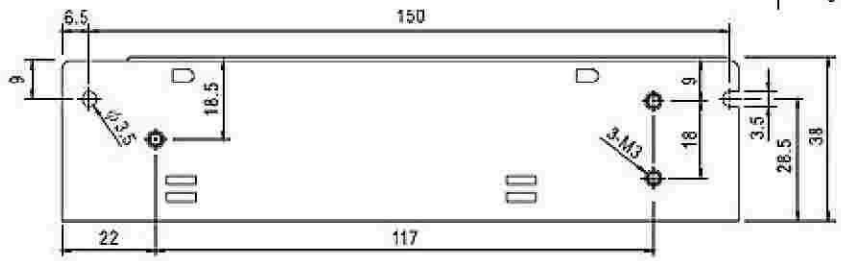

Overview

- Single unit output： 150W
- Input voltage： AC110/220±20%
- Size： 199×98×38mm

General Specification

Specofication	Model			
	BNES-150-5	BNES-150-12	BNES-150-24	BNES-150-48
DC output	5V 26A	12V 12.5A	24V 6.5A	48V 3.3A
Wave and noise	80mVp-p	120mVp-p	120mVp-p	120mVp-p
Inlet stability	±0.5%	±0.5%	±0.5%	±0.5%
Load stability	±0.5%	±0.5%	±0.5%	±0.5%
Efficiency	78%	83%	86%	87%
Adjustable range for DC voltage	±10%	±10%	±10%	±10%
AC input voltage range	AC110/220± 20% 47--63HZ			
AC inrush current	Cold-start current 50A/230V			
OverLoad protection	110%--150% hiccup mode,auto-recovery			
Over-voltage protection	115%--135% rated output voltage,hiccup mode,auto-recovery			
Setup,rise,hold up time	800ms 20ms 24ms/230VAC; 1200ms 30ms 20ms/115VAC			
Withstand voltage	I/P-O/P：1.5KvAC I/P-FG：1.5Kv O/P-FG：0.5Kv 1minute			
Isolation resistance	I/P-O/P I/P-FG O/P-FG:500VDC/100MΩ			
Working temperature	-10℃----+50℃			

Safety standards	Design refer to GB4943，UL60950，EN60950
EMC standards	Design refer to GB9254，EN55022 Class B
Weight	0.75kg

Overall Dimenseion(mm)

TOP

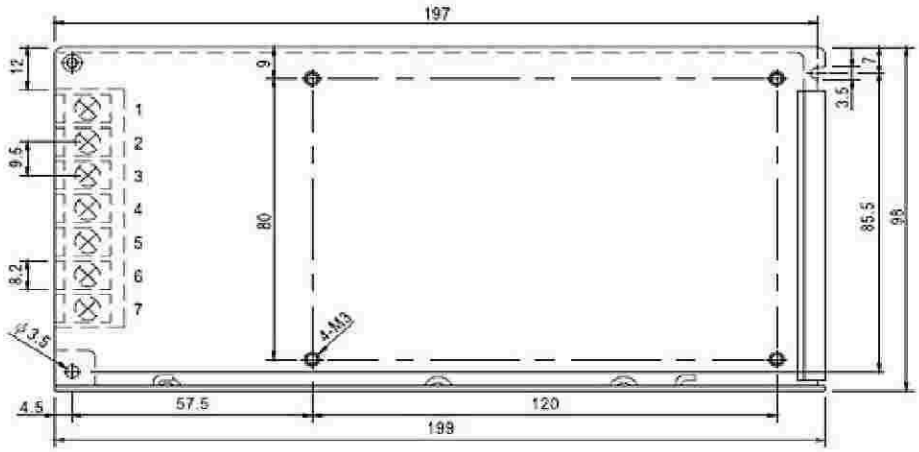

端子台脚位定义

引脚编号	引脚功能	引脚编号	引脚功能
1	AC/L	4,5	DC OUTPUT -V
2	AC/N	6,7	DC OUTPUT +V
3	FG ⏚		

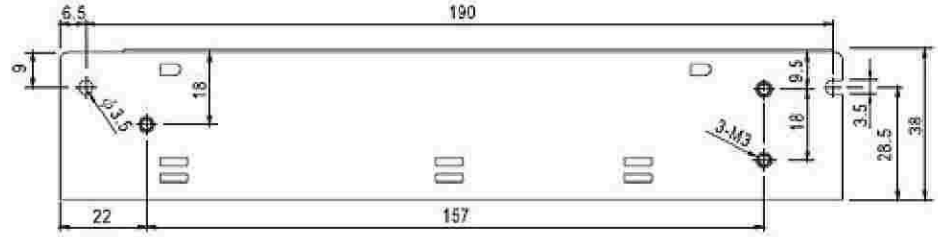

Dual output

Overview

- Dual output：15W
- Input Voltage range：85~264VAC
- Size：100×58×32mm

General Specification

Specification	Model	
	B D-15A	
DC output	5V 2A主回路	12V 0.5A次回路
Wave and noise	50mVP-P	80mVP-P
Inlet stability	±0.5%	±1%
Load stability	±0.5%	±1%
Efficiency	70%	
Adjustable range for DC voltage	±10%	
AC input voltage range	85~264VAC 47~63Hz 120~370VDC	
AC Inrush current	Cold-start current 30A/230V	
OverLoad protection	105%~135% hiccup mode ,auto-recovery	
Over-voltage protection	115%~140% rated output voltage	
Setup,rise,hold up time	2000ms, 50ms,20ms	
Withstand voltage	I/P-O/P：1.5KvAC I/P-FG:1.5KvAC O/P-FG:0.5Kv AC 1 minute	
Isolation resistance	I/P-O/P I/P-FG O/P-FG:500VDC/100MΩ	
Working temperature	-10℃~+50℃	
Safety standards	Design refer to GB4943,UL60950,EN60950	
EMC standards	Design refer toGB9254,EN55022 classB	
Weight	0.18kg	

Overall Dimenseion(mm)

TOP

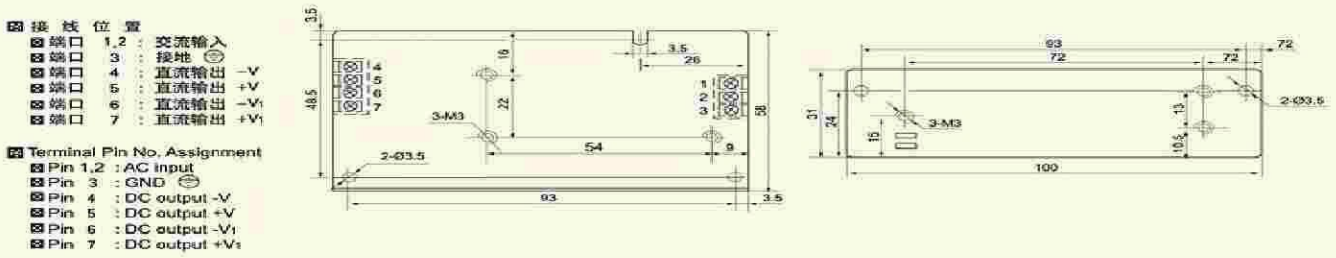

Overview

- Dual output：25W
- Input Voltage range：AC220±20%
- Site：110×78×35mm

General Specification

Specification	Model	
	B D-25A	
DC output	5V 2A主回路	12V 1A次回路
Wave and noise	50mVP-P	80mVP-P
Inlet stability	±0.5%	±1%
Load stability	±0.5%	±1%
Efficiency	70%	
Adjustable range for DC voltage	±10%	±10%
AC input voltage range	176~264VAC 47~63Hz 255~370VDC	
AC Inrush current	Cold-start current 30A/230V	
OverLoad protection	105%~~135% hiccup mode ,auto-recovery	
Over-voltage protection	115%~140% rated output voltage	
Setup,rise,hold up time	200ms, 50ms,20ms	
Withstand voltage	I/P-O/P：1.5KvAC I/P-FG :1.5KvAC O/P-FG:0.5Kv AC 1 minute	
Isolation resistance	I/P-O/P I/P-FG O/P-FG:500VDC/100MΩ	
Working temperature	-10℃~+50℃	
Safety standards	Design refer to GB4943,UL60950,EN60950	
EMC standards	Design refer to GB9254,EN55022 classB	
Weight	0.28kg	

Overall Dimenseion(mm)

TOP

接 线 位 置
- 端口 1,2 ： 交流输入
- 端口 3 ： 接地 ⏚
- 端口 4 ： 直流输出 −V
- 端口 5 ： 直流输出 +V
- 端口 6 ： 直流输出 −V1
- 端口 7 ： 直流输出 +V1

Terminal Pin No. Assignment
- Pin 1,2 : AC input
- Pin 3 : GND ⏚
- Pin 4 : DC output -V
- Pin 5 : DC output +V
- Pin 6 : DC output -V1
- Pin 7 : DC output +V1

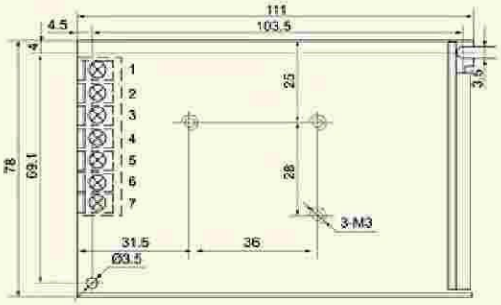

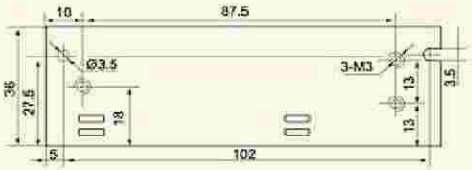

Overview

- Dual output：30W
- Input Voltage range：AC110/220±20%
- Site：129×98×35mm

General Specification

Specification	Model	
	D-30A	
	CH1主回路	CH1主回路
DC output	5V 4A	12V 1A
Wave and noise	50mVP-P	100mVP-P
Inlet stability	±0.5%	±1%
Load stability	±0.5%	±4%
Efficiency	72%	
Adiustable range for DC voltage	CH1:±10,-5%	
AC input voltage range	85~132VAC/170~264VAC Selected by switch 47~63Hz 240~370VDC	
AC Inrush current	Cold-start current 18A/115V 36A/230V	
OverLoad protection	105%～150% hiccup mode ,auto-recovery	
Over-voltage protection	.....	
Setup,rise,hold up time	200ms, 50ms,20ms	
Withstand voltage	I/P-O/P：1.5KvAC I/P-FG :1.5KvAC O/P-FG:0.5Kv AC 1 minute	
Isolation resistance	I/P-O/P I/P-FG O/P-FG:500VDC/100MΩ	
Working temperature	-10℃～+50℃	
Safety standards	Design refer to GB4943,UL60950,EN60950	
EMC standards	Design refer to GB9254,EN55022 classB	
Weight	0.4kg	

Overall Dimenseion(mm)

TOP

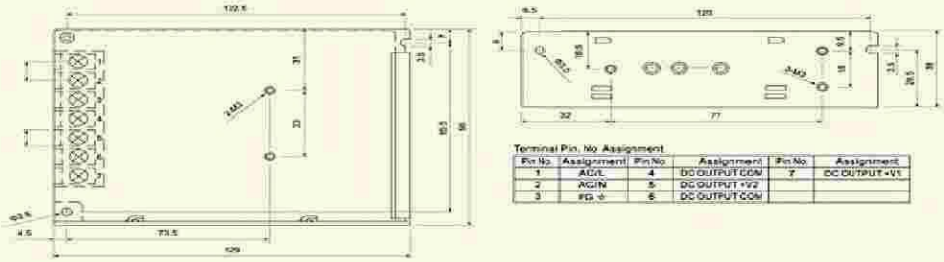

Terminal Pin No Assignment

Pin No.	Assignment	Pin No	Assignment	Pin No.	Assignment
1	AC/L	4	DC OUTPUT COM	7	DC OUTPUT +V1
2	AC/N	5	DC OUTPUT +V2		
3	FG ⏚	6	DC OUTPUT COM		

Overview

- Dual output：50W
- Input Voltage range：AC110/220±20% selectble by switch
- Site：159×97×38mm

General Specification

Specification	Model	
	D-50A	
	CH1主回路	CH1主回路
DC output	5V 6A	12V 2A
Wave and noise	50mVP-P	100mVP-P
Inlet stability	±0.5%	±1%
Load stability	±0.5%	±5%
Efficiency	73%	
Adjustable range for DC voltage	CH1:±10,-5%	
AC input voltage range	85~132VAC/170~264VAC Selected by switch 47~63Hz 240~370VDC	
AC Inrush current	Cold-start current 18A/115V 36A/230V	
OverLoad protection	105%～150% hiccup mode ,auto-recovery	
Over-voltage protection	……	
Setup,rise,hold up time	200ms, 50ms,30ms	
Withstand voltage	I/P-O/P：1.5KvAC I/P-FG:1.5KvAC O/P-FG:0.5Kv AC 1 minute	
Isolation resistance	I/P-O/P I/P-FG O/P-FG:500VDC/100MΩ	
Working temperature	-10℃~+50℃	
Safety standards	Design refer to GB4943,UL60950,EN60950	
EMC standards	Design refer to GB9254,EN55022 classA	
Weight	0.52kg	

Overall Dimenseion(mm)

TOP

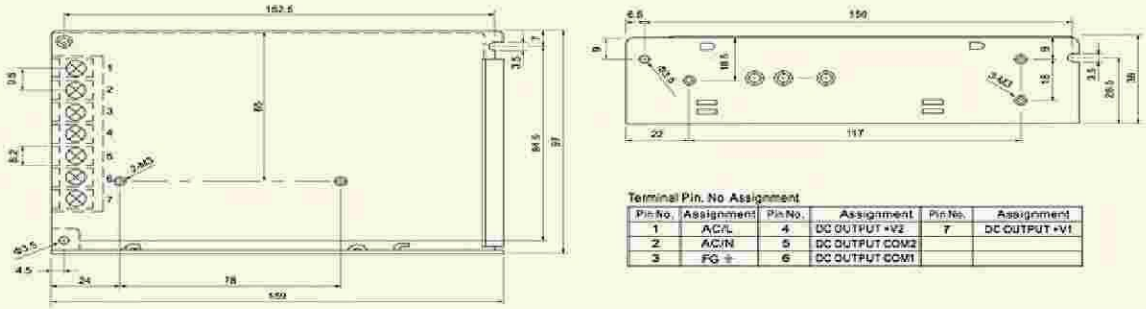

Terminal Pin. No Assignment

Pin No.	Assignment	Pin No.	Assignment	Pin No.	Assignment
1	AC/L	4	DC OUTPUT +V2	7	DC OUTPUT +V1
2	AC/N	5	DC OUTPUT COM2		
3	FG ⏚	6	DC OUTPUT COM1		

Overview

- Dual output：60W
- Input Voltage range：85~264VAC
- Site：159×97×38mm

General Specification

Specification	Model	
	D-60A	
	CH1主回路	CH2次回路
DC output	5V 4A	12V 3A
Wave and noise	70mVP-P	150mVP-P
Inlet stability	±0.5%	±1%
Load stability	±0.5%	±4%
Efficiency	73%	
Adjustable range for DC voltage	CH1:±10,-5%	
AC input voltage range	85~264VAC 47~63Hz 120~370VDC	
AC Inrush current	Cold-start current 30A/115V 60A/230V	
OverLoad protection	105%~150% hiccup mode ,auto-recovery	
Over-voltage protection	CH1:5.75-6.75V/115VAC	
Setup,rise,hold up time	800ms, 50ms,10ms/115VAC 300ms,50ms,80ms/230VAC	
Withstand voltage	I/P-O/P：3KvAC I/P-FG：1.5KvAC O/P-FG:0.5Kv AC 1 minute	
Isolation resistance	I/P-O/P I/P-FG O/P-FG:500VDC/100MΩ	
Working temperature	-10℃~+50℃	
Safety standards	Design refer to GB4943,UL60950,EN60950	
EMC standards	Design refer to GB9254,EN55022 classB	
Weight	0.55kg	

Overall Dimenseion(mm)

TOP

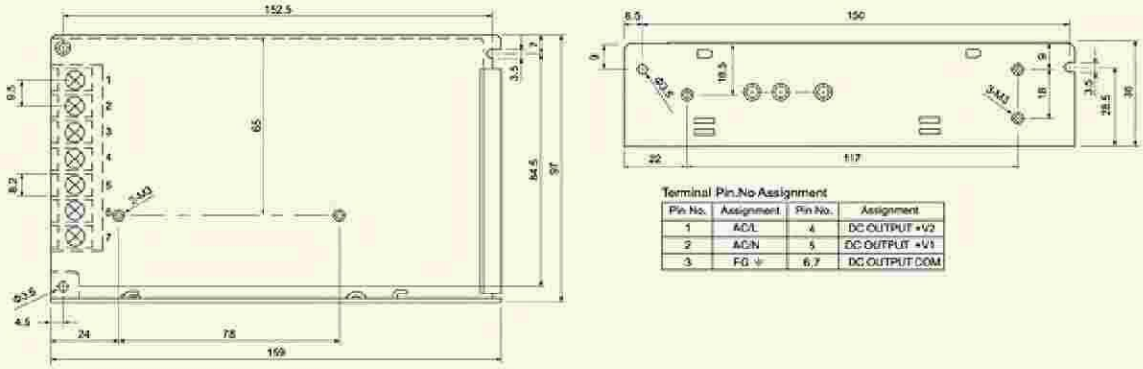

Terminal Pin.No Assignment

Pin No.	Assignment	Pin No.	Assignment
1	AC/L	4	DC OUTPUT +V2
2	AC/N	5	DC OUTPUT +V1
3	FG ⏚	6,7	DC OUTPUT COM

Overview

- Dual output：120W
- Input Voltage range：AC110/220±20% selectble by switch
- Site：199×110×50mm

General Specification

Specification	Model	
	D-120A	
	CH1主回路	CH2次回路
DC output	5V 12A	12V 5A
Wave and noise	60mVP-P	120mVP-P
Inlet stability	±0.5%	±1%
Load stability	±0.5%	±5%
Efficiency	78%	80%
Adiustable range for DC voltage	CH1:±10,-5%CH1:±10,-5%	
AC input voltage range	88~132VAC/176~264VAC Selected by switch 47~63Hz 248~370VDC	
AC Inrush current	Cold-start current 30A	
OverLoad protection	105%~135% hiccup mode ,auto-recovery	
Over-voltage protection	CH1:5.75~6.75V	
Setup,rise,hold up time	200ms, 50ms,20ms	
Withstand voltage	I/P-O/P：3KvAC I/P-FG :1.5KvAC O/P-FG:0.5Kv AC 1 minute	
Isolation resistance	I/P-O/P I/P-FG O/P-FG:500VDC/100MΩ	
Working temperature	-10℃~+50℃	
Safety standards	Design refer to GB4943,UL60950,EN60950	
EMC standards	Design refer to GB9254,EN55022 classB	
Weight	0.85kg	

Overall Dimenseion(mm)

TOP

接 线 位 置
- 端口 1,2 ：交流输入
- 端口 3 ：接地 ⏚
- 端口 4 ：直流输出 +V2
- 端口 5,6 ：直流输出 COM
- 端口 7,8 ：直流输出 +V1

Terminal Pin No. Assignment
- Pin 1, 2 : AC input
- Pin 3 : GND ⏚
- Pin 4 : DC output +V2
- Pin 5, 6 : DC output COM
- Pin 7, 8 : DC output +V1

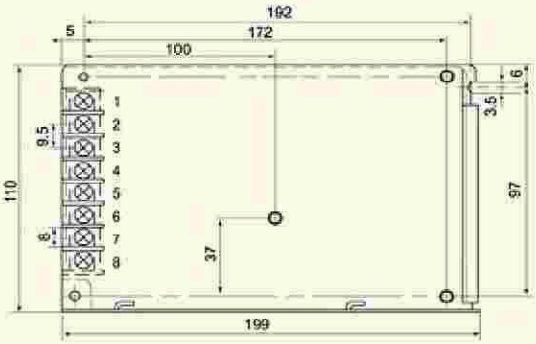

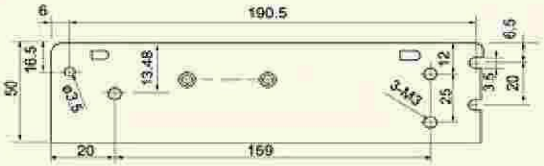

Overview

- Dual output：150W
- Input Voltage range：AC110/220±20% selectble by switch
- Site：199×110×50mm

General Specification

Specification	Model	
	D-150E	
	CH1主回路	CH2次回路
DC output	+24V 3A	-24V 3A
Wave and noise	50mV	80mV
Inlet stability	±0.5%	±1%
Load stability	±0.5%	±5%
Efficiency	80%	
Adjustable range for DC voltage	CH1:±10,-5%	
AC input voltage range	88~132VAC/176~264VAC Selected by switch 47~63Hz 240~370VDC	
AC Inrush current	Cold-start current 35A/230VAC	
OverLoad protection	105%~135% hiccup mode ,auto-recovery	
Over-voltage protection	CH1:5.75~6.75V	
Setup,rise,hold up time	200ms, 50ms,20ms	
Withstand voltage	I/P-O/P：3KvAC I/P-FG:1.5KvAC O/P-FG:0.5Kv AC 1 minute	
Isolation resistance	I/P-O/P I/P-FG O/P-FG:500VDC/100MΩ	
Working temperature	-10℃~+50℃	
Safety standards	Design refer to GB4943,UL60950,EN60950	
EMC standards	Design refer to GB9254,EN55022 classB	
Weight	0.85kg	

Overall Dimenseion(mm)
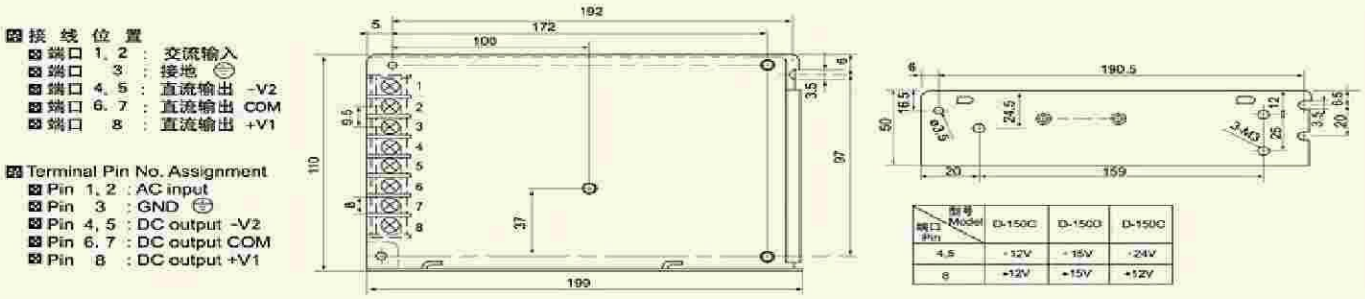
TOP